ITEM NO.	QTY. -041	PART NUMBER	DESCRIPTION
1	**X**	**D3531-041**	**BRACKET ASSEMBLY**
2	1	D3531-1	BRACKET
3	1	D3531-3	BRACKET FRONT PLATE
4	2	MS20426AD4(-4)	RIVET
5	10	MS20470AD4(-4)	RIVET

PB1

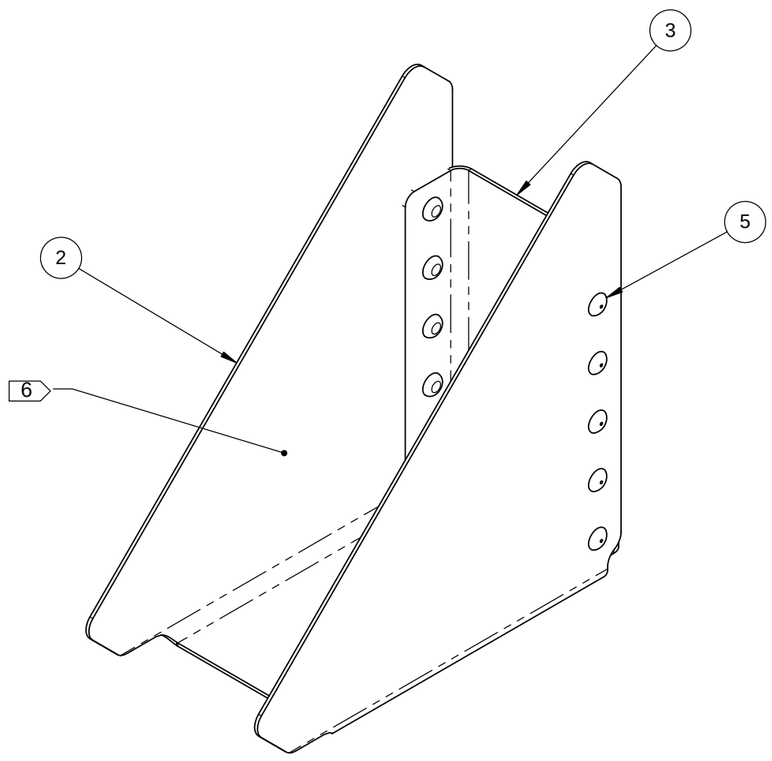

D3531-041 BRACKET ASSEMBLY

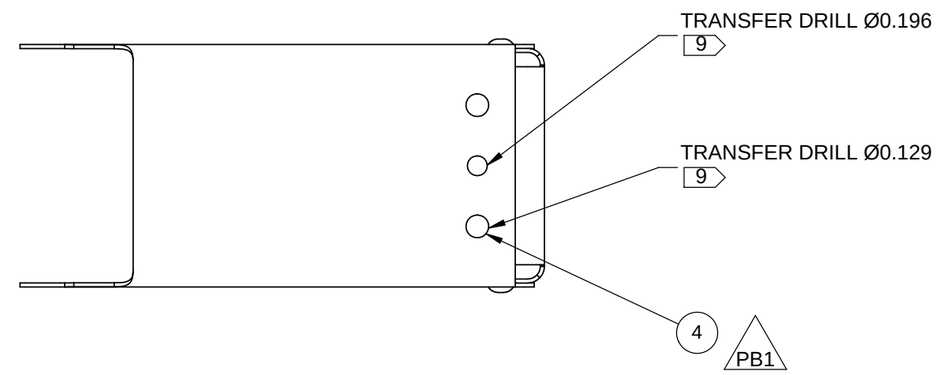

D3531-041 BRACKET ASSEMBLY
BOTTOM VIEW

PRELIMINARY ISSUE

DC 12.08.09

D3531-041 BRACKET ASSEMBLY

NOTES:
1) MATERIAL: N/A
2) FINISH: POWDER COAT ASSEMBLY "BLACK SANDTEX" (4.3.5.7) PER DART QSI 005 4.3 ALL PARTS
3) TOLERANCES: PER DART QSI 018 UNLESS OTHERWISE NOTED
4) UNITS: INCHES UNLESS OTHERWISE NOTED
5) BREAK SHARP EDGES: 0.005 TO 0.010 MAX
6) IDENTIFICATION: IDENTIFY PER QSI 044 6.1 ON INSIDE OF BRACKET ASSEMBLY, WHERE INDICATED
7) WEIGHT: 0.22 lbs
8) ASSEMBLYE PER DART QSI 003
9) TRANSFER DRILL HOLES FROM D3531-1 BRACKET THROUGH D3531-3 BRACKET FRONT PLATE BEFORE FINISHING

REV.	DESCRIPTION	BY	DATE
PB1	CHANGE BOTTOM RIVETS FROM MS20470AD4-4 TO MS20426AD4-4, ZN C2-1, C5-3. ADD CSK, ZN C5-3. CORRECT BEND LINE DIM, ZN C4-3. UPDATE TO CURRENT DWG STANDARDS.	DC	12.08.09
A	NEW ISSUE	CB	07.06.19

DESIGN	CB	**DART AEROSPACE LTD** HAWKESBURY, ONTARIO, CANADA	
DRAWN	DC		
CHECKED		DRAWING NO. D3531	REV. PB1
MFG. APPR.			SHEET 1 OF 5
APPROVED		TITLE BRACKET ASSEMBLY	SCALE NTS
DE APPR.			
DATE	12.08.09		

COPYRIGHT © 2012 BY DART AEROSPACE LTD
THIS DOCUMENT IS PRIVATE AND CONFIDENTIAL AND IS SUPPLIED ON THE EXPRESS CONDITION THAT IT IS NOT TO BE USED FOR ANY PURPOSE OR COPIED OR COMMUNICATED TO ANY OTHER PERSON WITHOUT WRITTEN PERMISSION FROM DART AEROSPACE LTD.

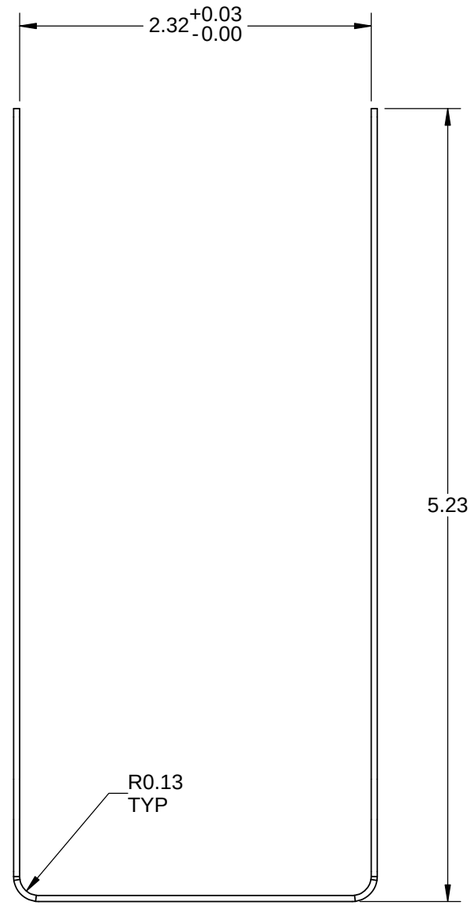

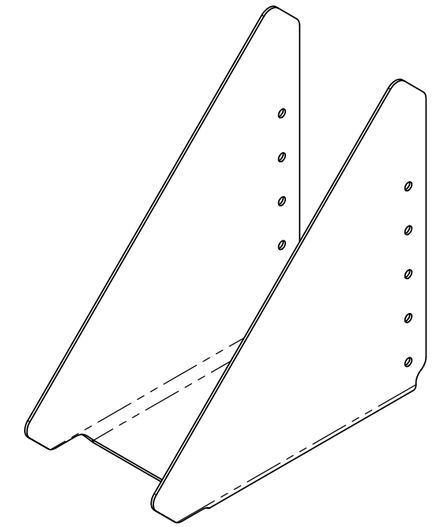

D3531-1 BRACKET

NOTES:
1) MATERIAL: MADE FROM D3531-1F
2) FINISH: CHEMICAL CONVERSION COAT PER DART QSI 005 4.1
3) TOLERANCES: PER DART QSI 018 UNLESS OTHERWISE NOTED
4) UNITS: INCHES UNLESS OTHERWISE NOTED
5) BREAK SHARP EDGES: 0.005 TO 0.010 MAX
6) IDENTIFICATION: N/A
7) WEIGHT: 0.16 lbs

DESIGN	CB	**DART AEROSPACE LTD** HAWKESBURY, ONTARIO, CANADA
DRAWN	DC	
CHECKED		DRAWING NO. D3531 — REV. PB1 — SHEET 2 OF 5
MFG. APPR.		
APPROVED		TITLE BRACKET ASSEMBLY — SCALE NTS
DE APPR.		
DATE	12.08.09	

COPYRIGHT © 2012 BY DART AEROSPACE LTD
THIS DOCUMENT IS PRIVATE AND CONFIDENTIAL AND IS SUPPLIED ON THE EXPRESS CONDITION THAT IT IS NOT TO BE USED FOR ANY PURPOSE OR COPIED OR COMMUNICATED TO ANY OTHER PERSON WITHOUT WRITTEN PERMISSION FROM DART AEROSPACE LTD.

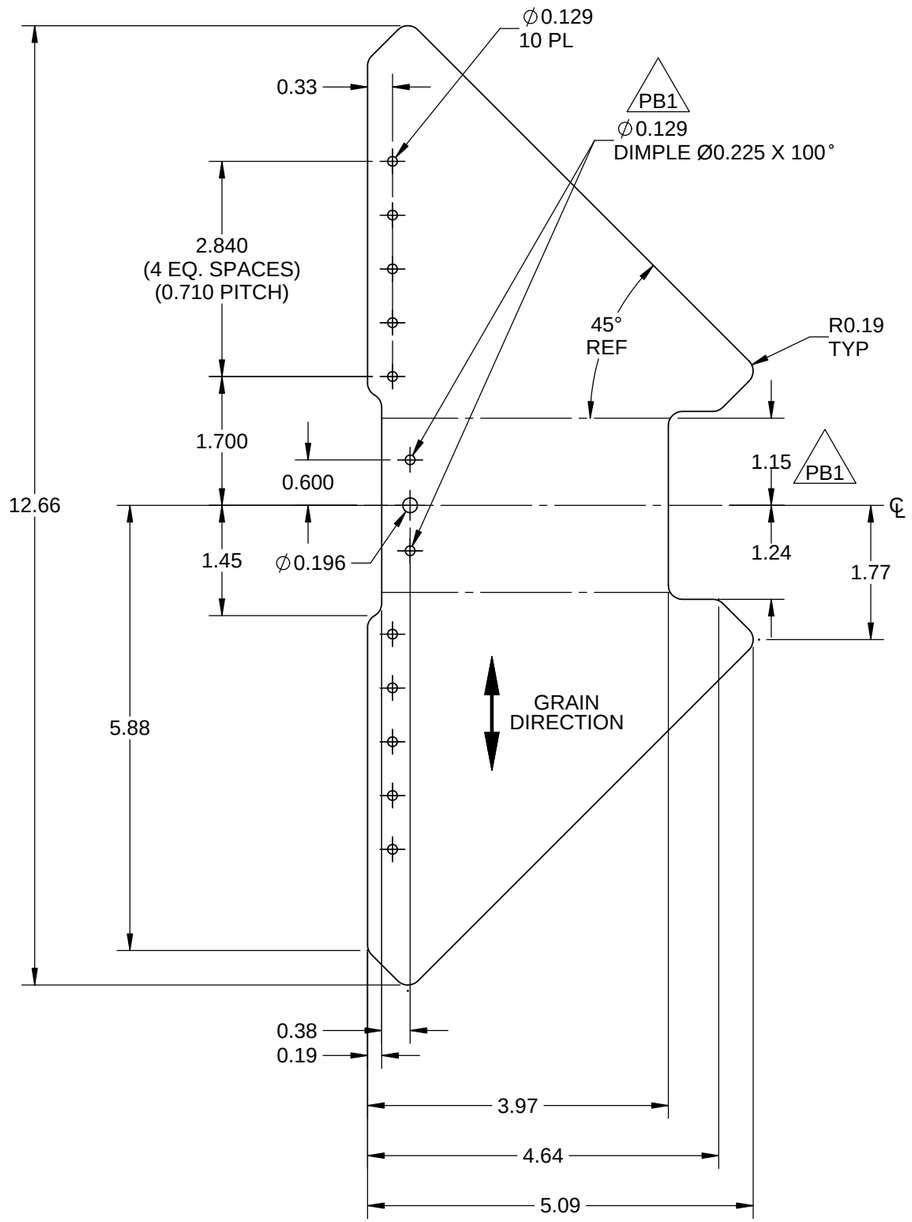

D3531-1F FLAT PATTERN

NOTES:
1) MATERIAL: 6061-T6/T62 ALUMINUM SHEET, 0.040 THICK
PER QQ-A-250/11 OR AMS 4025 OR AMS 4027 OR ASTM B209
REF DART SPEC M6061T6S.040
2) FINISH: N/A
3) TOLERANCES: PER DART QSI 018 UNLESS OTHERWISE NOTED
4) UNITS: INCHES UNLESS OTHERWISE NOTED
5) BREAK SHARP EDGES: 0.005 TO 0.010 MAX
6) IDENTIFICATION: N/A
7) WEIGHT: 0.16 lbs

DESIGN	CB	**DART AEROSPACE LTD** HAWKESBURY, ONTARIO, CANADA
DRAWN	DC	
CHECKED		DRAWING NO. D3531 — REV. PB1 — SHEET 3 OF 5
MFG. APPR.		
APPROVED		TITLE BRACKET ASSEMBLY — SCALE NTS
DE APPR.		
DATE	12.08.09	

COPYRIGHT © 2012 BY DART AEROSPACE LTD
THIS DOCUMENT IS PRIVATE AND CONFIDENTIAL AND IS SUPPLIED ON THE EXPRESS CONDITION THAT IT IS NOT TO BE USED FOR ANY PURPOSE OR COPIED OR COMMUNICATED TO ANY OTHER PERSON WITHOUT WRITTEN PERMISSION FROM DART AEROSPACE LTD.

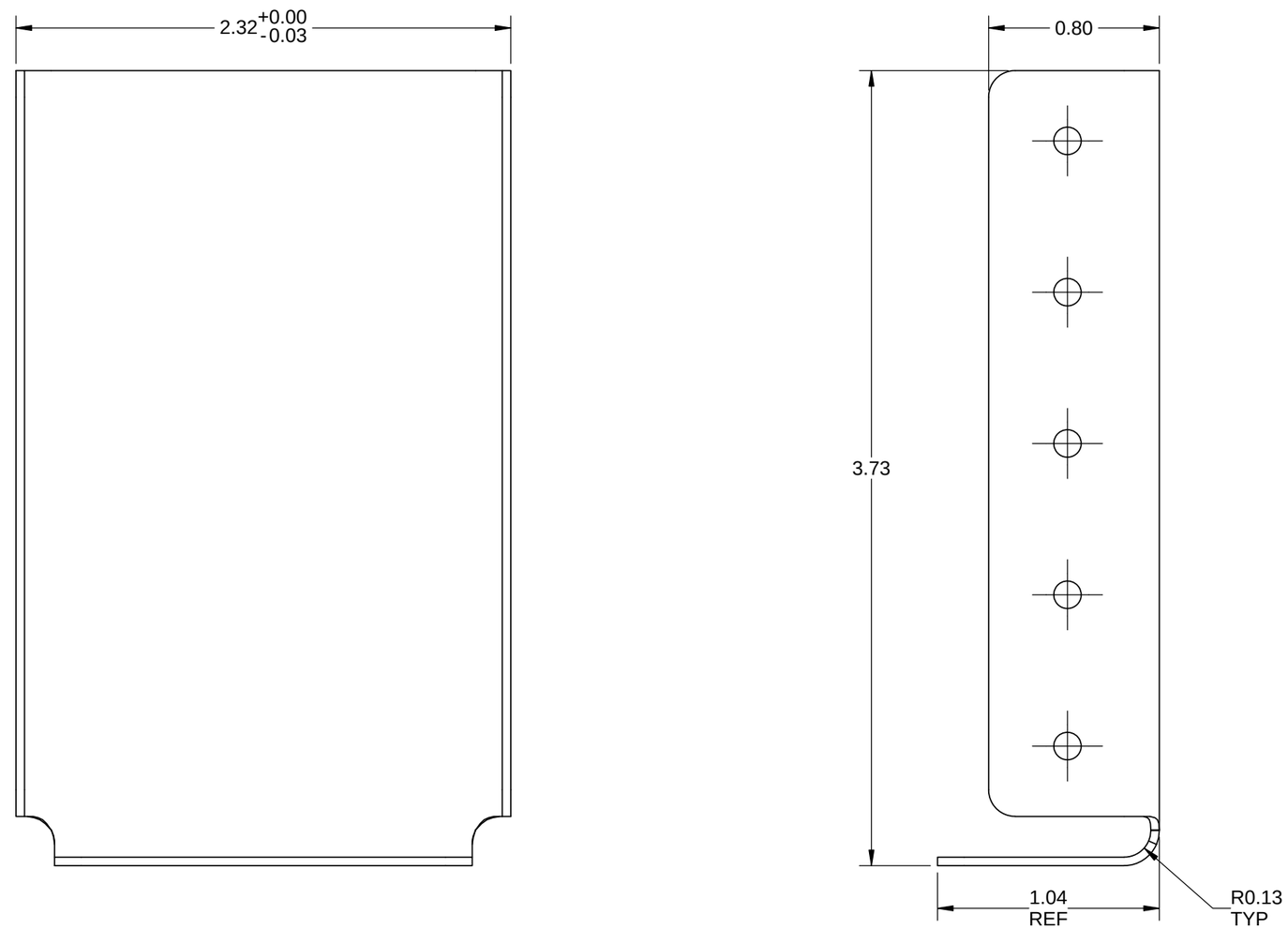

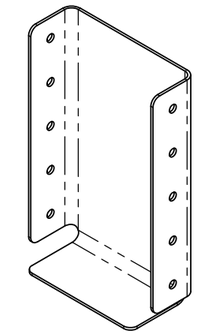

D3531-3 BRACKET FRONT PLATE

NOTES:
1) MATERIAL: MADE FROM D3531-3F
2) FINISH: CHEMICAL CONVERSION COAT PER DART QSI 005 4.1
3) TOLERANCES: PER DART QSI 018 UNLESS OTHERWISE NOTED
4) UNITS: INCHES UNLESS OTHERWISE NOTED
5) BREAK SHARP EDGES: 0.005 TO 0.010 MAX
6) IDENTIFICATION: N/A
7) WEIGHT: 0.06 lbs

DESIGN	CB	**DART AEROSPACE LTD** HAWKESBURY, ONTARIO, CANADA
DRAWN	BC	
CHECKED		DRAWING NO. D3531 — REV. PB1 — SHEET 4 OF 5
MFG. APPR.		
APPROVED		TITLE: BRACKET ASSEMBLY — SCALE: NTS
DE APPR.		
DATE	12.08.09	

COPYRIGHT © 2012 BY DART AEROSPACE LTD
THIS DOCUMENT IS PRIVATE AND CONFIDENTIAL AND IS SUPPLIED ON THE EXPRESS CONDITION THAT IT IS NOT TO BE USED FOR ANY PURPOSE OR COPIED OR COMMUNICATED TO ANY OTHER PERSON WITHOUT WRITTEN PERMISSION FROM DART AEROSPACE LTD.

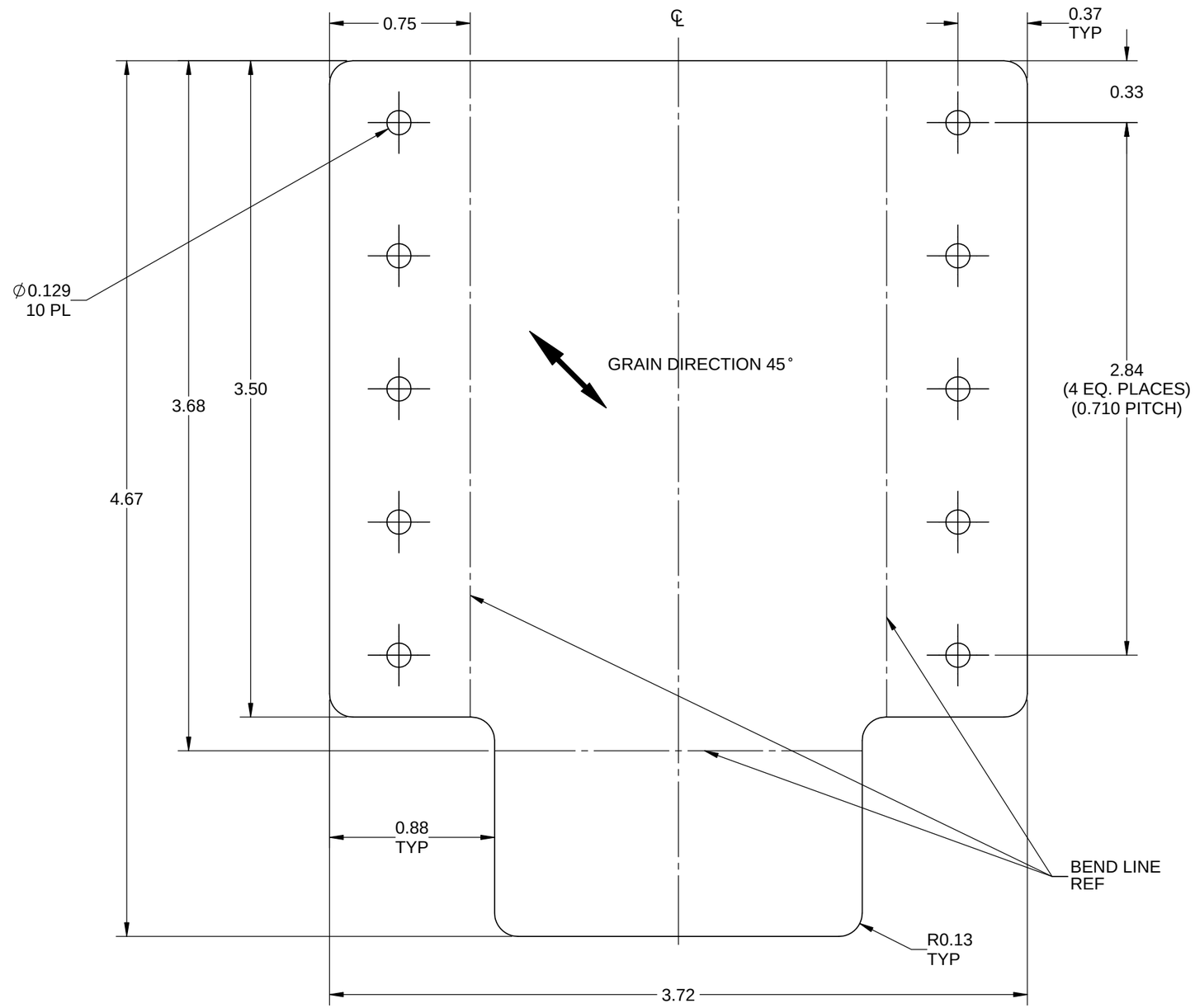

D3531-3F FLAT PATTERN

NOTES:
1) MATERIAL: 6061-T6/T62 ALUMINUM SHEET, 0.040 THICK
PER QQ-A-250/11 OR AMS 4025 OR AMS 4027 OR ASTM B209
REF DART SPEC M6061T6S.040
2) FINISH: N/A
3) TOLERANCES: PER DART QSI 018 UNLESS OTHERWISE NOTED
4) UNITS: INCHES UNLESS OTHERWISE NOTED
5) BREAK SHARP EDGES: 0.005 TO 0.010 MAX
6) IDENTIFICATION: N/A
7) WEIGHT: 0.06 lbs

DESIGN	CB	**DART AEROSPACE LTD** HAWKESBURY, ONTARIO, CANADA
DRAWN	DC	
CHECKED		DRAWING NO. D3531 — REV. PB1 — SHEET 5 OF 5
MFG. APPR.		
APPROVED		TITLE: BRACKET ASSEMBLY — SCALE: NTS
DE APPR.		
DATE	12.08.09	

COPYRIGHT © 2012 BY DART AEROSPACE LTD
THIS DOCUMENT IS PRIVATE AND CONFIDENTIAL AND IS SUPPLIED ON THE EXPRESS CONDITION THAT IT IS NOT TO BE USED FOR ANY PURPOSE OR COPIED OR COMMUNICATED TO ANY OTHER PERSON WITHOUT WRITTEN PERMISSION FROM DART AEROSPACE LTD.